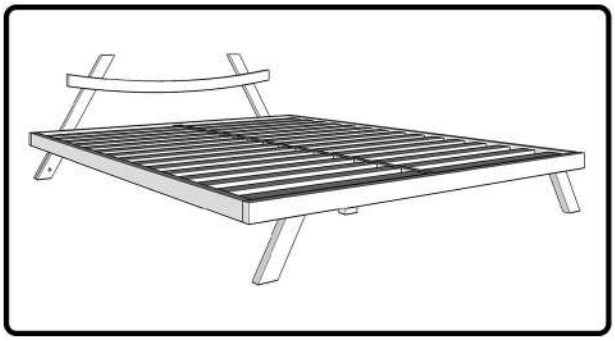

KEEP AWAY
FROM SUN

KEEP DRY

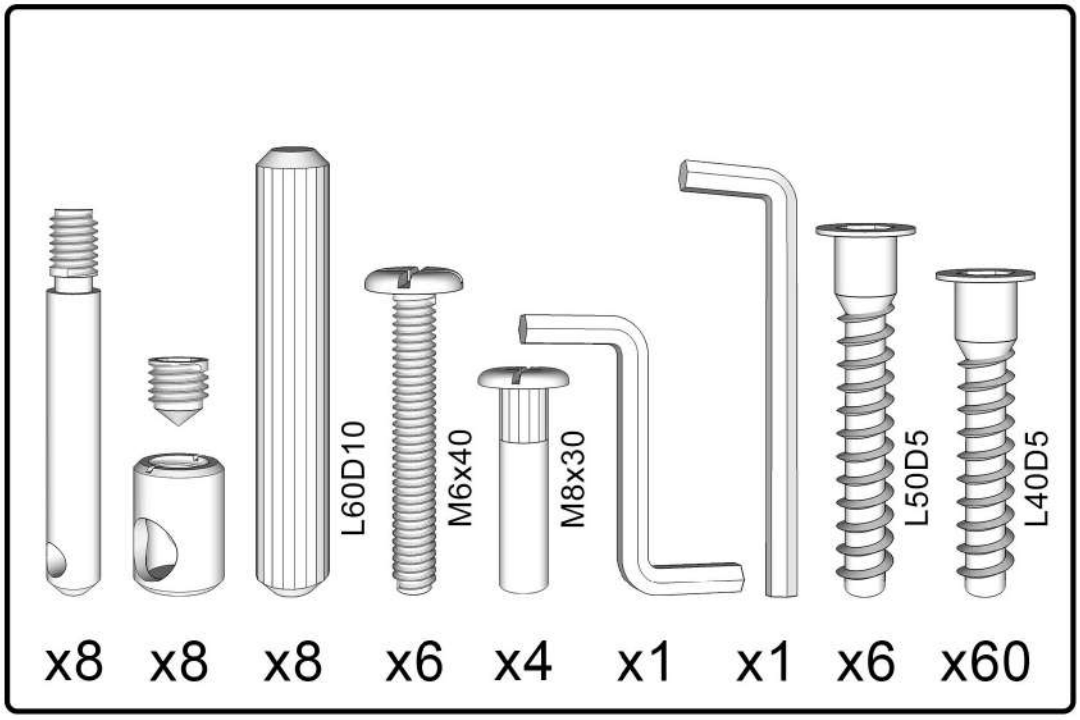
L60D10
M6x40
M8x30
L50D5
L40D5
x8
x8
x8
x6
x4
x1
x1
x6
x60

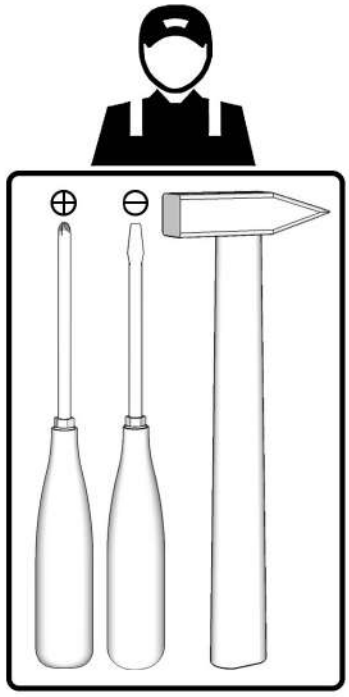

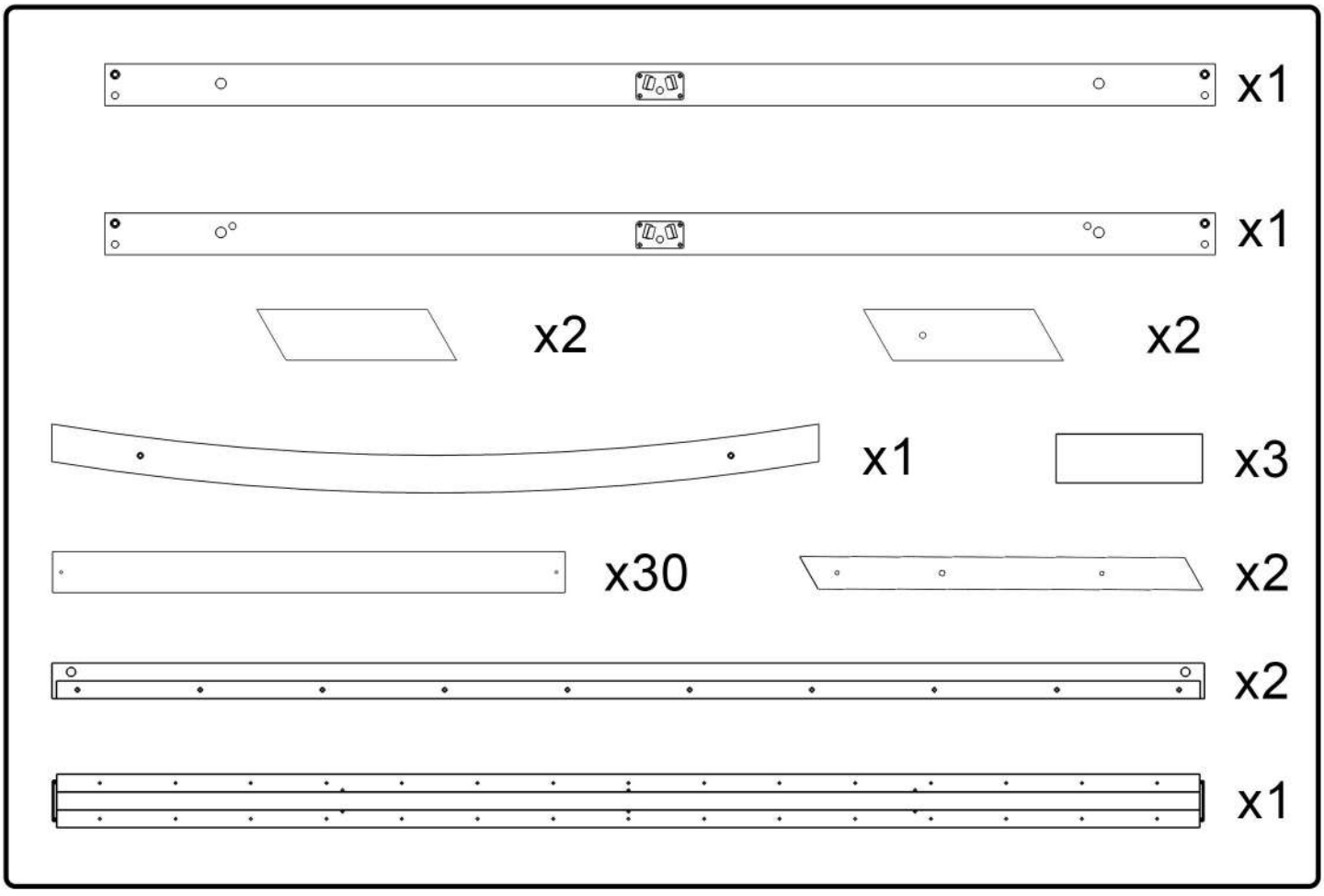
x1
x1
x2
x2
x1
x3
x30
x2
x2
x1

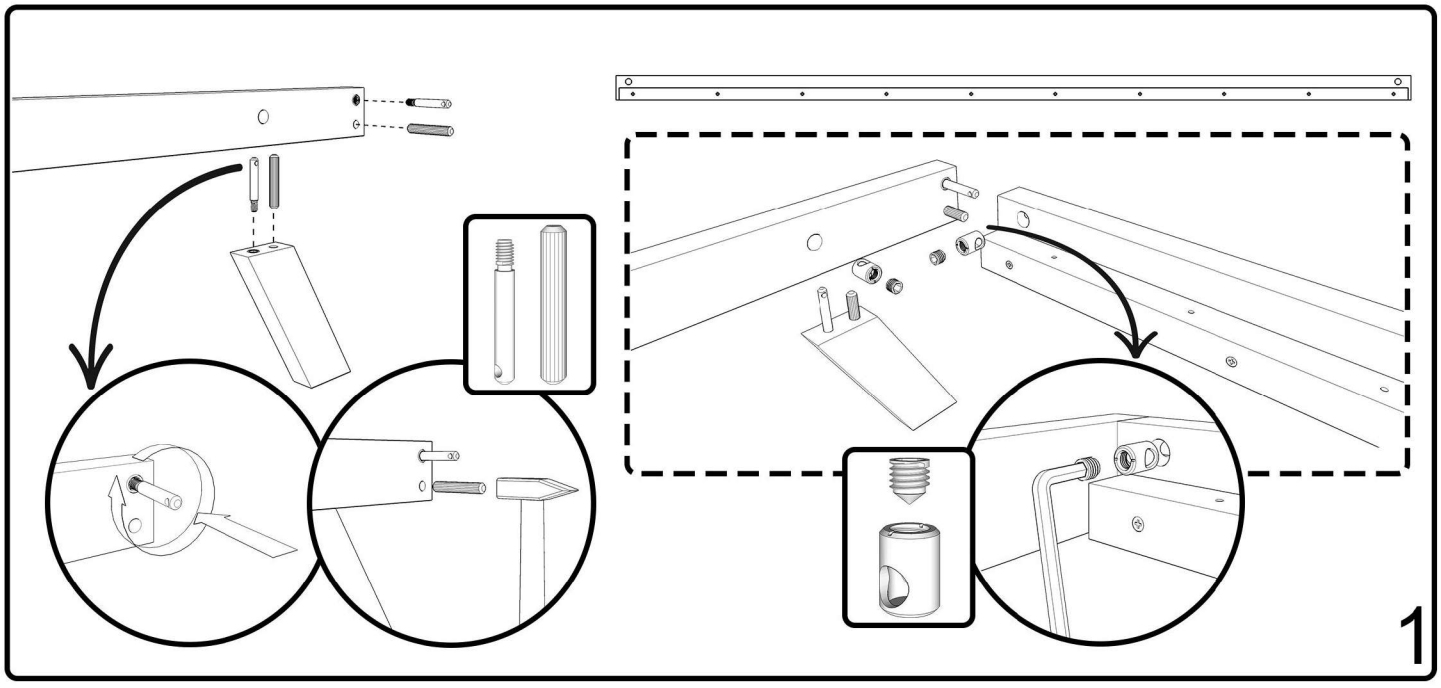
1

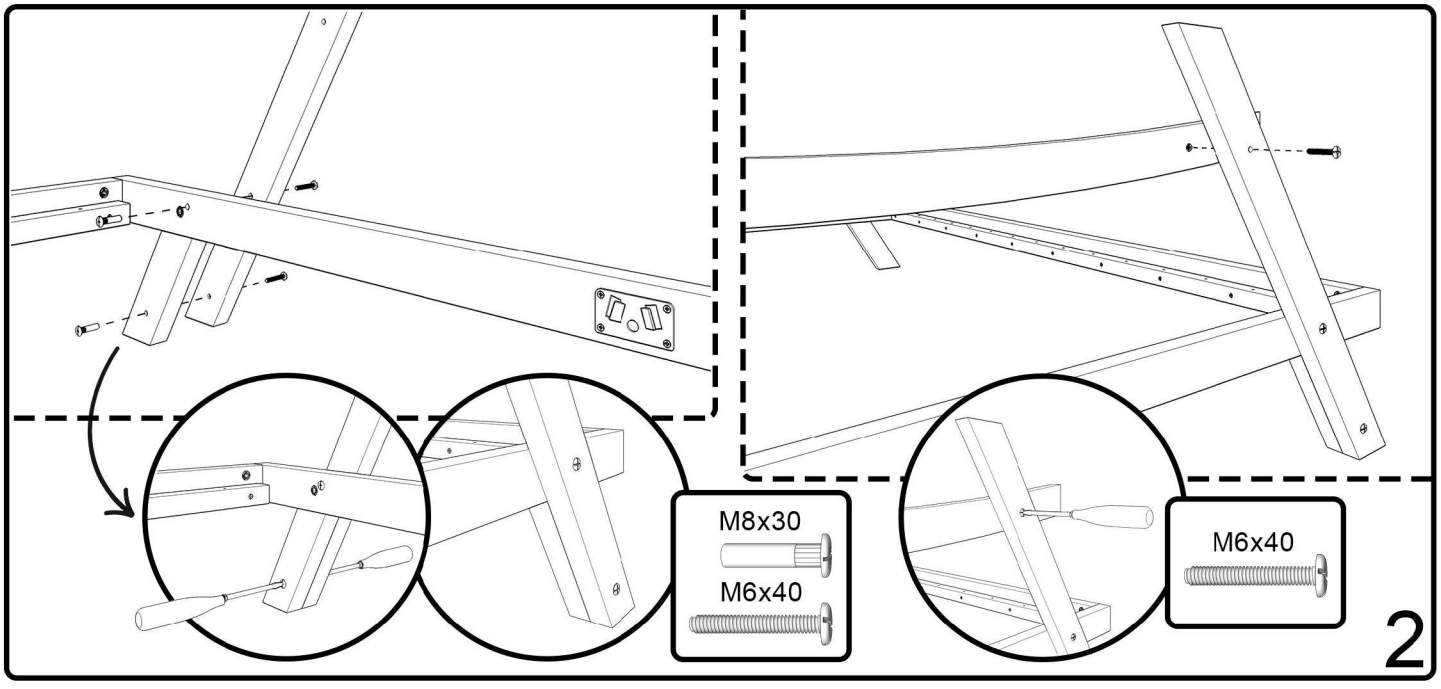
M8x30
M6x40
M6x40
2

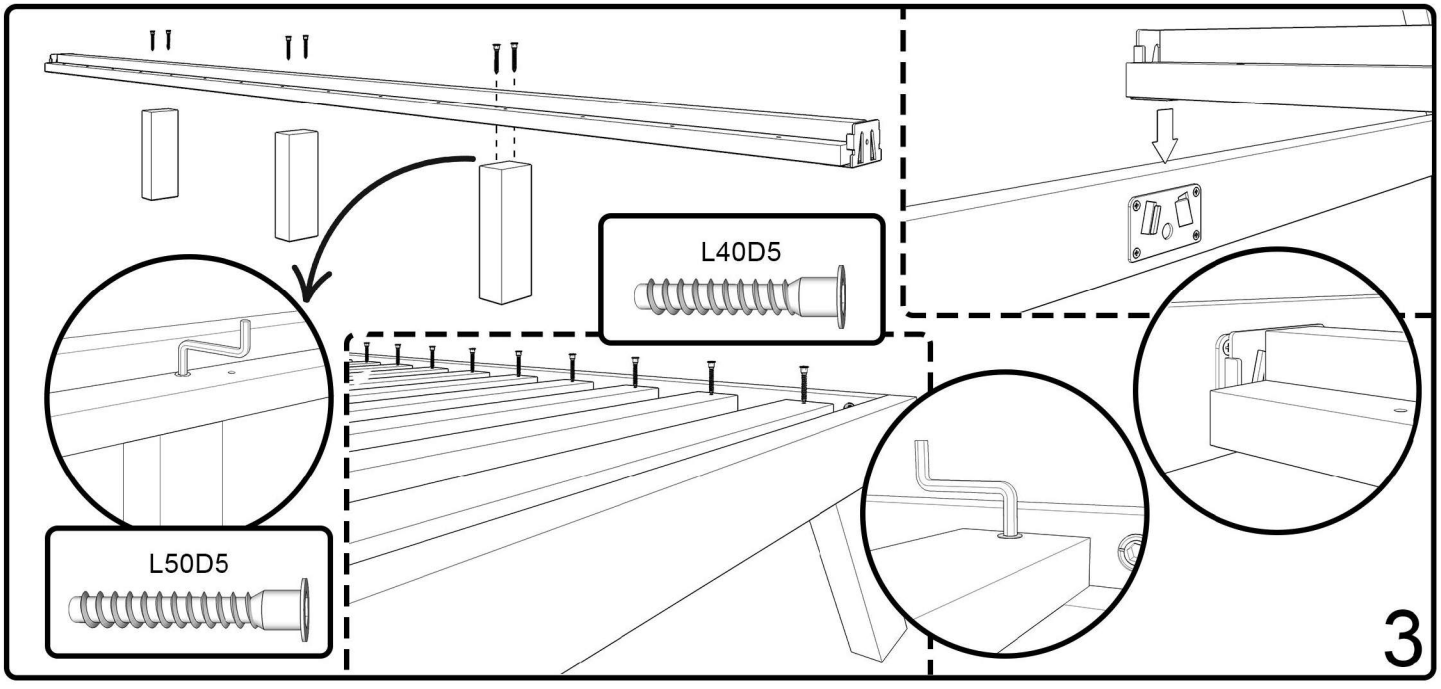
L40D5
L50D5
3